LUCLAR

INTERNATIONAL

MINISTRAW

use and maintenance

DICHIARAZIONE CE	CE DECLARATION

PRODUTTORE **MANUFACTURER**

CRONO S.r.l.

Via Corvione, 20 - 25010 Isorella - (Brescia) Italy

DESCRIZIONE DELLE MACCHINE PRODOTTE

TRINCIA DISTRIBUTORE DI PRODOTTI E DI FORAGGIO DEI TIPI E MODELLI SOTTO INDICATI

NORMATIVE DI RIFERIMENTO AI FINI DELLA SICUREZZA

LE MACCHINE SONO CONFORMI AI REQUISITI DI SICUREZZA STABILITI DALLA DIRETTIVA 89/392/CEE COME MODIFICATA DALLE DIRETTIVE 91/368/CEE 93/44/CEE E 93/68/CEE

DESCRIPTION OF MACHINES PRODUCED

CHOPPER AND DISTRIBUTOR OF PRODUCTS FOR ANIMAL BEDDING AND OF FORAGE

SAFETY RULES

THE MACHINES COMPLY WITH THE REQUISITES ESTABLISHED BY DIRECTIVE 89/392/EEC AS MODIFIED BY DIRECTIVES 91/368/ECC, 93/44/ECC AND 93/68/ECC

MODELLI	MODELLE	MODELES	MODELS
➢ UNIBALL 1500	➢ UNIBALL 1500	➢ UNIBALL 1500	
➢ UNIBALL 1800	➢ UNIBALL 1800	➢ UNIBALL 1800	
➢ MINISTRAW	➢ MINISTRAW	➢ MINISTRAW	

TIMBRO E FIRMA DELL'IMPORTATORE STEMPEL UND UNTERSCHRIFT DES IMPORTEURS CACHET ET SIGNATURE DE L'IMPORTATEUR STAMP AND SIGNATURE OF IMPORTER	SELLO Y FIRMA DEL IMPORTADOR HANDTEKENING EN STEMPEL VAN DE IMPORTEUR CANIMBO E ASSINATURA DO IMPORTADOR ΣΦΡΑΓΙΔΑ ΚΑΙ ΥΠΟΓΡΑΦΗ ΤΟΥ ΕΙΣΑΓΩΓΕΑ

TIMBRO E FIRMA DEL VENDITORE STEMPEL UND UNTERSCHRIFT DES HÄNDLERS CACHET ET SIGNATURE DU VENDEUR STAMP AND SIGNATURE OF SELLER	SELLO Y FIRMA DEL VENDEDOR HANDTEKENING EN STEMPEL VAN DE VERKOPER CANIMBO E ASSINATURA DO FORNECEDOR ΣΦΡΑΓΙΔΑ ΚΑΙ ΥΠΟΓΡΑΦΗ ΤΟΥ ΠΩΛΗΤΗ

ELENCO DEI RIPARATORI PIU' VICINI AL LUOGO DI UTILIZZO DELLA MACCHINA
LISTE DER MECHANIKER, DIE IN DER NÄHE DES EINSATZORTES DER MASCHINE ZU FINDEN SIND
LISTE DES REPARATEURS LES PLUS PROCHES DE L'ENDROIT D'UTILISATION DE LA MACHINE
LIST OF EXPERT REPAIR MEN CLOSEST TO PLACE OF USE
LISTA DE LOS TECNICOS REPARADORES MAS CERCANOS DEL LUGAR EN QUE SE USA LA MAQUINA
LIJST VAN REPARATEURS IN DE DIRECTE OMGEVING VAN DE PLAATS VAN GEBRUIK VAN DE MACHINE
LISTA DOS TÉCNICOS MAIS PRÓXIMOS DO LOCAL DE UTILIZAÇÃO DA MÁQUINA
ΚΑΤΑΛΟΓΟΣ ΤΩΝ ΠΛΗΣΙΕΣΤΕΡΩΝ ΣΥΝΕΡΓΕΙΩΝ ΣΤΗΝ ΠΕΡΙΟΧΗ ΟΠΟΥ ΧΡΗΣΙΜΟΠΟΙΕΙΤΑΙ ΤΟ ΜΗΧΑΝΗΜΑ

.....

.....

.....

.....

.....

PITTOGRAMMI DI SICUREZZA SICHERHEITSSYMBOLE PICTOGRAMMES DE SECURITE
SAFETY WARNING SYMBOLS
CARTELES INDICADORES DE SEGURIDAD VEILIGHEIDSPICTOGRAMMEN
PICTOGRAMAS DE SEGURANÇA
ΠΙΚΤΟΓΡΑΦΙΕΣ ΑΣΦΑΛΕΙΑΣ

Attenzione!
Parti in movimento, allontanare le persone dalla zona pericolosa.
Achtung!
Bewegliche Teile, Personen aus dem Gefahrenbereich verweisen.
Attention!
Pièces en mouvement, éloigner toute personne de la zone dangereuse.
Caution!
Parts in motion, keep people away from danger zone.
¡Atención!
Elementos en movimiento, alejar a todas las personas de la zona peligrosa.
Let op!
Bewegende delen, verwijder alle personen uit het gevaarlijke gebied.
Atenção!
Partes em movimento, afastar as pessoas da zona perigosa.
Προσοχή!
Μέρη εν κινήσει, απομακρύνετε τους ανθρώπους από την επικίνδυνη ζώνη.

Indicazione di PERICOLO.
GEFAHRENHINWEIS .
Indication de DANGER.
DANGER sign
Indicación de PELIGRO.
GEVAARAANDUIDING
Indicação de PERIGO.
Ένδειξη ΚΙΝΔΥΝΟΥ.

Segnalazione punti di INGRASSAGGIO.
Hinweis für die SCHMIERSTELLEN.
Signalisation des points de GRAISSAGE.
GREASE POINT marker.
Señalización de los puntos de ENGRASE.
Signalering SMEERPUNTEN.
Assinalação dos pontos de LUBRIFICAÇÃO.
Επισήμανση σημείων ΓΡΑΣΑΡΙΣΜΑΤΟΣ.

Segnalazione di parti sporgenti della macchina.
Hinweis auf hervorragende Maschinenteile
Signalisation d'éléments en saillie de l'équipement.
Indication of protruding parts.
Señalización de partes fuera de gálibo del equipo.
Signalering voor uitstekende delen van de machine.
Assinalação de partes salientes da máquina.
Επισήμανση προεξεχόντων μερών του μηχανήματος.

Indicazione pressione massima circuito idraulico.
Collocato presso il blocco comandi.
Angabe bezüglich des maximalen hydraulischen Drucks
Angebracht bei der Steuerungseinheit
Indication de la pression maximum du circuit hydraulique.
Placé à côté du bloc de commandes.
Indication of maximum pressure in hydraulic circuit.
Placed near control panel.
Indicación de la presión máxima del circuito hidráulico.
Situado cerca del bloque de mandos.
Aanduiding voor de maximumdruk van het hydraulische circuit.
Aangebracht bij de besturingsorganen.
Indicação da pressão máxima do circuito hidráulico.
Colocado próximo do bloco de comandos.
Ένδειξη μέγιστης πίεσης υδραυλικού κυκλώματος.
Τοποθετημένη στο πλαίσιο εντολών.

Numero massimo di giri presa di forza trattore e senso di rotazione. Collocato sul timone della macchina.
Maximale Anzahl der Antriebsdrehungen des Traktors und Drehrichtung. Angebracht an der Maschinendeichsel
Régime maximum de la prise de force du tracteur et sens de rotation. Placé sur le timon de l'équipement.
Maximum rpm of power takeoff on tractor and direction of rotation. Placed on machine rudder.
Número máximo de revoluciones de la toma de fuerza del tractor y sentido de rotación. Situado sobre la vara del equipo.
Maximum aantal toeren van de aftak-as van de traktor en draairichting. Aangebracht op het stuurhendel van de machine.
Número máximo de rotações por minuto da tomada de força do tractor e sentido de rotação. Colocado na cauda da máquina.
Μέγιστος αριθμός στροφών λήψης ενέργειας τρακτέρ και φορά περιστροφής. Τοποθετημένη στο τιμόνι του μηχανήματος.

Indicazione pressione di gonfiaggio pneumatici.
Angabe zum maximalen Reifendruck.
Indication de la pression de gonflage des pneumatiques.
Indication of tire inflation pressure.
Indicación de la presión de inflado de los neumáticos.
Aanduiding van de bandenspanning.
Indicação da pressão de enchimento dos pneumáticos.
Ένδειξη πίεσης αέρα πνευματικών.

CONTENTS

1. CONDITIONS AND LIMITATIONS OF USE 2

1.1 SAFETY 2

1.2 TRANSPORT AND INSTALLATION 3

2. MAINTENANCE / REPAIR / SETTING 4

2.1 REGULATION VALVE 4

2.2 ROTOR ROTATION SPEED 5

2.3 GEARBOX (CONTROL / TOPPING UP) 5

2.4 REDUCTION GEAR (CONTROL / TOPPING UP) 6

2.5 GREASING POINTS 6

2.6 REPLACEMENT OF ROTOR BLADES 7

2.7 TOPPING UP, TESTING AND GREASING FREQUENCY 7

2.8 LOADING CHAIN MAINTENANCE 8

2.9 ROTOR BLOCKING 8

2.10 SAFETY VALVES 9

2.11 THIRD POINT 9

2.12 TABLE OF SUGGESTED LUBRICANTS 10

2.13 KIT FOR THE CONNECTION TO THE ELECTRIC CIRCUIT 10

2.14 KIT FOR THE CONNECTION TO THE HYDRAULIC CIRCUIT 10

3. WARNINGS 10

4. WARRANTY 10

5. INSTRUCTIONS FOR USE 10

5.1 CONNECTION OF THE MACHINE TO THE TRACTOR 10

5.2 MACHINE LOADING 11

5.3 DISTRIBUTION 11

1. CONDITIONS AND LIMITATIONS OF USE

The UNIBALL machine has been designed and manufactured for such materials as hay, straw, silage, and wood-shavings. It is absolutely forbidden to use this machine for grinding materials not specifically envisaged, such as wood, loose chemical substances, combustible, inflammable and explosive materials, gravel, metallic material, tyres.

Max. allowed transverse ground slope: 10%
Max. allowed longitudinal ground slope: 10%
Avoid working on a muddy or sandy ground or on a ground, which causes an inclination of the machine at work greater than 10%.

The machine has been planned and manufactured to operate under the normal conditions use by a single operator. The operation of the machine through several people at the same time can be dangerous even if safety measures are taken. Maintenance and repair interventions, for which adequate precautionary measures according to this handbook must be taken, are an exception.

The control of all operational functions of the machine can be carried out only from the driving seat of the tractor with which the machine is linked.

For a good functioning and a correct preservation of the axles the machine must never bump into obstacles or holes, undergo violent load shifting, be used on saline or very corrosive soils. The axle must never be immersed in liquids.

1.1 SAFETY

- Before using the machine make sure that the limitations of use as indicated in the chapter "Conditions and limitations of use" have been adhered to.

- Before starting to work, make sure that no bystanders or animals are within the range of action of the machine. During the distribution phase of the material there is a risk connected with the projection of the material itself and of possible foreign objects contained in it (e.g. stones, metallic pieces, etc...). For this reason avoid the presence of people or animals in the distribution zone.

- The control of the machine functions is carried out by levers of "spring return", except for the control of starting the loading conveyor motor.

- Check the meaning of the labels attached near the control levers (see drawing C).

- The function for the opening/closing of the chute can be visually checked through the Plexiglas window located on the front part of the machine frame. The motion of the rotor is signalled by a yellow light signal device situated in the upper part of the machine.

- When the function mentioned in the previous paragraph is going to be activated, make sure that the light signal device works.
  IF THE LIGHT SIGNAL DEVICE DOES NOT WORK, STOP OPERATING THE MACHINE UNTIL IT HAS BEEN RESTORED.

1.2 TRANSPORT AND INSTALLATION

The machine is not certified for road traffic.

The applicable transport modalities are the following:

- tractor towing by hitching the eyelet to the hitch by means of a steel bolt, with a min diameter of 35 mm, equipped with a transverse safety pin;
- by truck;
- by railway truck;
- in a container;
- by ship.

In case of transportation by truck, railway truck, container or ship, the machine must be loaded with a chute or a loading platform by means of a tractor or a windlass or with a crane (or other lifting devices) by means of ropes or chains hitched to the drilled plates fixed to the above part of the machine.

During transportation the loading conveyor and the outlet deflector of the machine must be completely closed. The fastening of the machine must be effected using besides the towing eyelet, the 3 rings located in the lower part of the machine.
Moreover it is absolutely necessary to put blocks in the front as well as in the rear part of the wheels.

The unloading of the machine from the means of transport can be carried out by following the same procedures as for its loading.

2. MAINTENANCE / REPAIRS / SETTING

ALL SETTING, GREASING, MAINTENANCE, REPAIRS AND CLEANING OPERATIONS MUST BE CARRIED OUT WHEN THE MACHINE IS AT A STANDSTILL.

When the operator needs to enter dangerous areas to carry out such operations as setting, greasing, maintenance, repairs and cleaning, these must be carried out only after disconnecting the PTO shaft and switching off the electric and hydraulic connections between the tractor and the machine.

The variables subject to modification and their relative setting points are:

2.1 REGULATION VALVE

FEED SPEED OF THE LOADING CONVEYOR
It can be modified by means of the regulation valve placed above the distributor.

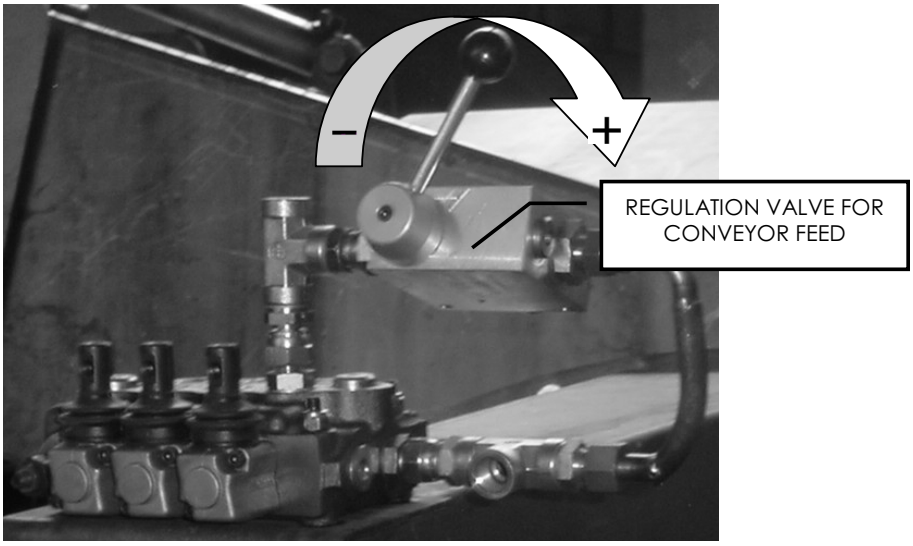

2.2 ROTOR ROTATION SPEED

It can be modified in the two positions allowed (540 rpm – 270 rpm) by means of the gearbox lever placed on the transmission reduction gear.

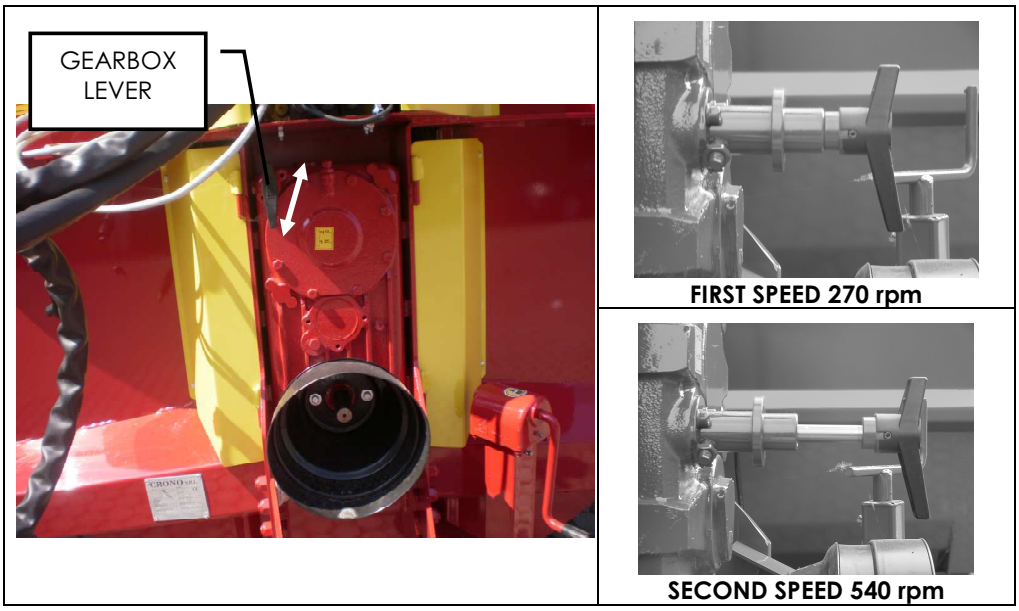

2.3 GEARBOX (CONTROL / TOPPING UP)

Control/topping up of the fluids level:
OIL OF THE TRANSMISSION REDUCTION GEAR. The reduction gear located on the transmission of the machine is provided with 3 holes with close nipples for:
- the oil filling (upper hole)
- the oil level control (intermediate hole)
- the oil draining (lower hole)

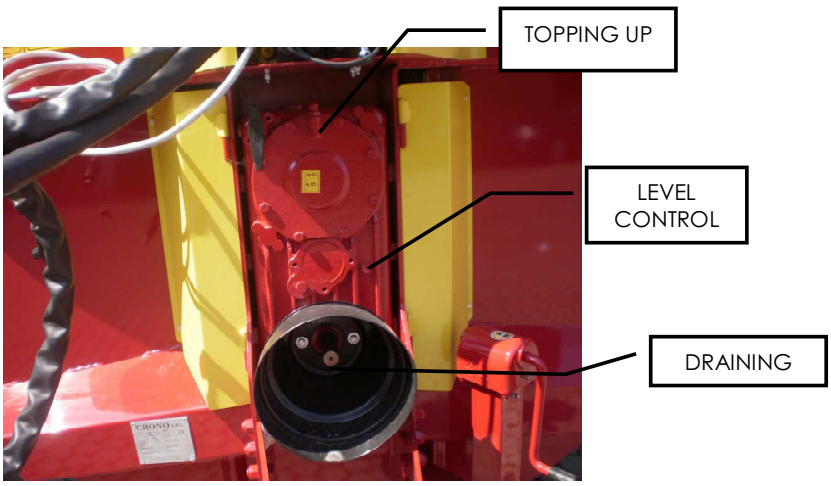

2.4 REDUCTION GEAR (CONTROL / TOPPING UP)

OIL OF THE TRANSMISSION REDUCTION GEAR OF THE CONVEYOR.
The reduction gear located at the side of the machine is provided with 3 threaded holes for:
- the oil filling (upper hole)
- the oil level control (intermediate hole)
- the oil draining (lower hole)

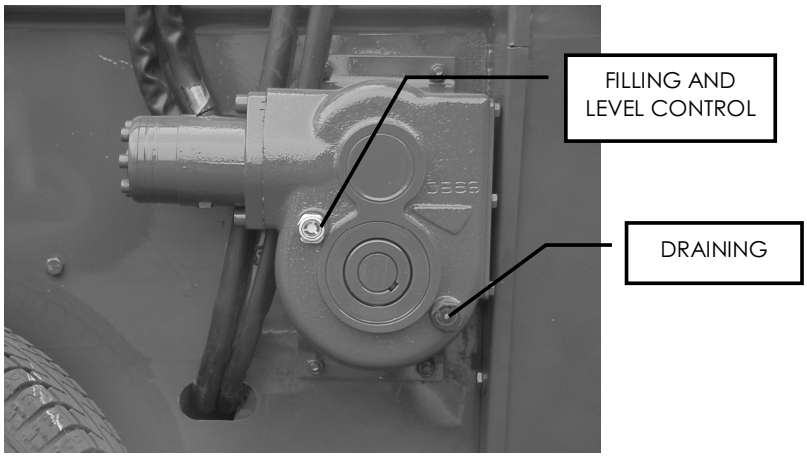

THE FILLING AND THE DRAINING OF THE ABOVE-MENTIONED FLUIDS MUST BE CARRIED OUT UNSCREWING THE CLOSE NIPPLES ON CORRESPONDING HOLES USING A SUITABLE TOOL.

2.5 GREASING POINTS

TRANSMISSION GEARS OF THE LOADING CONVEYOR. The oil nipples are located next to the transmission gears but out of dangerous areas.

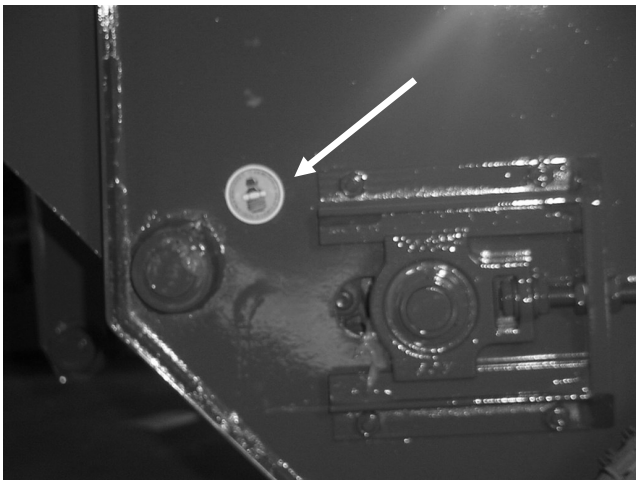

HYDRAULIC JACK FOR MOVING THE LOADING CONVEYOR. The greasers are located on the rotation bushings.
JOURNALS PIROUETTING WHEELS (SEMI-LIFTED MODEL). The greasers are located on the rotation bushing.

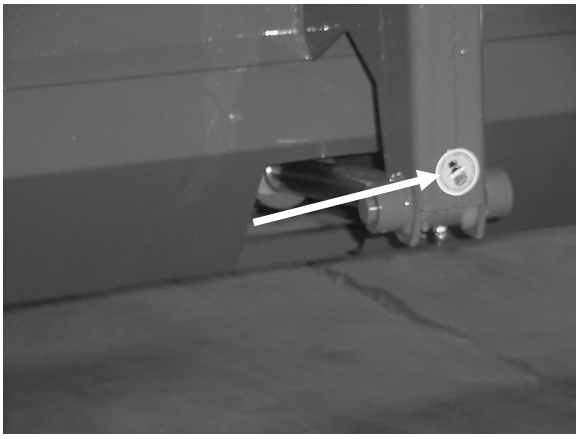

ALL THE GREASING POINTS ARE MARKED BY APPROPRIATE LABEL.

In the trailer model the lubrication, the disassembling and the remounting of the AXLES for the periodic maintenance or repairs must be performed by SKILLED PERSONNEL or by EXPERIENCED MECHANICS.

2.6 REPLACEMENT OF ROTOR BLADES

The rotor blades normally require frequent maintenance. The periodic testing is therefore essential.
If the knives do not work efficiently, the cut is not clean, the machine will be more stressed and subjected to a higher degree of wear.
When the operator is working with a single knife, he is very close to the other knives mounted on the rotor. It is therefore compulsory to set or replace the knives wearing:

- overalls made of strong fabric
- safety footwear with ankle protection
- gloves.

The instruction indicated in paragraph 2 should also be considered.

2.7 TOPPING UP, TESTING AND GREASING FREQUENCY

The frequency according to which all testing, topping up, replacing and greasing operations must be carried out is described as follows:

a) AXLES (bearings)
Testing / Greasing (by skilled personnel) at least every year.

b) WHEELS
The tightening of the wheels to the hub must be tested every 6 (six) months or, at least, every 200 working hours.

c) ROTOR BLADES
Testing / Replacement at least once every 6 months or, in any case, every 50 working hours.

2.8 LOADING CHAIN MAINTENANCE

The chain pull must be tested every 50 working hours; in case the chain is released, the chain adjuster can be set by means of a 19 mm wrench. The chain is considered to be sufficiently stretched when it can bend up to 10/15 mm.

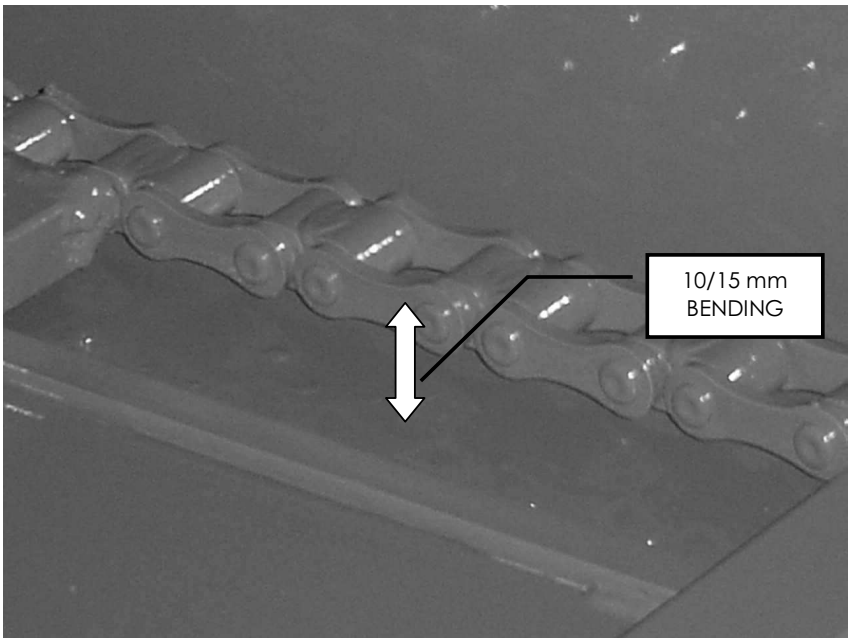

2.9 ROTOR BLOCKING

Should the rotor become blocked up during its normal use owing to particular unforeseen features of the material or because of some anomaly of the transmission gears, the security bolt located on the PTO shaft will break.
It is necessary for security reasons and before repairing it to:
- move the machine away from the working position;
- disengage the PTO;
- disconnect the PTO.

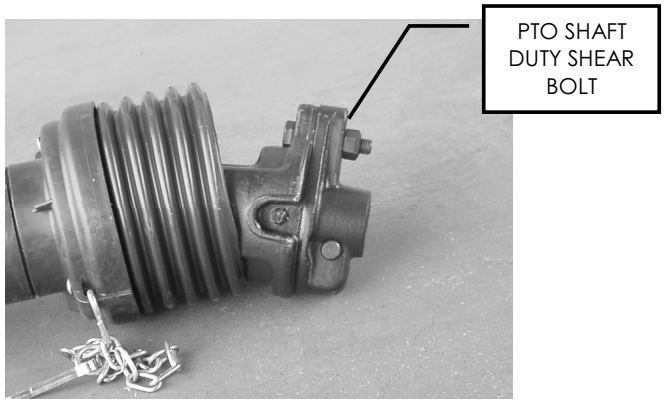

Generally, however, it is better to carry out any maintenance and repairs intervention NOT in the open but in a suitably equipped workshop.
The present manual does not contemplate the different situations arising from the possible removal of fixed or adjustable protections, from the deactivation of plant components, security valves, mechanical blocks and whatever has been intended for security reasons.
The machine frame has been planned so as NOT to allow any operator to go up to the above edge of the caisson. Should it be necessary to reach this area because of maintenance/repairs interventions, provisional works MUST be arranged (scaffolding, bridges, safety belts, etc...) and carried out in conformity with the accident prevention rules in force.

2.10 SAFETY VALVES

The machine hydraulic circuit is equipped with safety valves on the hydraulic jack for moving the loading chute. The automatic stop valve directly installed on the hydraulic jack prevents the motion of the loading chute in case of rupture / breakdown of the hydraulic circuit, until the plant working pressure has been restored.

If the maintenance / repairs intervention forces the operator to be in the moving radius of the loading chute, a device for the mechanical blocking of the lowering of the chute will have to be fitted by the operator as a security measure.

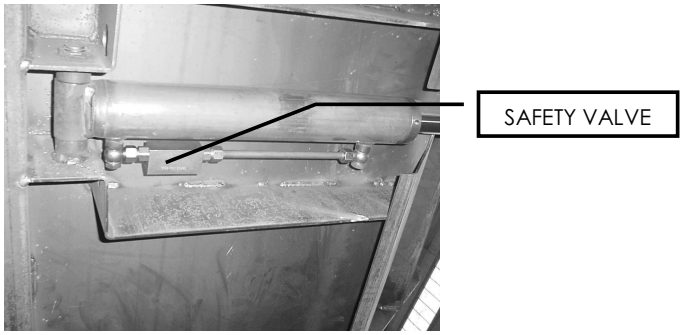

2.12 TABLE OF SUGGESTED LUBRICANTS

REDUCTION GEARS OILS	AGIP BLASIA 150 SHELL OMALA OIL 150 VALVOLINE GEAR EP 150 ESSO SPARTAN EP 150
LUBRICATION GREASE	AGIP GRMU EP 3 SHELL SUPERGREASE EP 3 VALVOLINE L3 EP GREASE ESSO BEACON 3

2.13 KIT FOR THE CONNECTION TO THE ELECTRIC CIRCUIT

The KIT for the electric connection includes:
1 pc. two-poled plug with cable code 361000070
1 pc. two-poled socket code 361000072

2.14 KIT FOR THE CONNECTION TO THE HYDRAULIC CIRCUIT

The KIT for the connection of the hydraulic circuit includes:
2 pcs. quick-attach hoses of 1/2" code 260011000

3. WARNINGS

The observance of the rules indicated in the present booklet guarantees a good performance of the machine, less power absorption and consequently less wear.
Do not move the machine when the chute is lowered and the deflector is opened.
Do not take sharp turns and bends when the PTO shaft is engaged.
Any repairs must be made when the machine is out of operation.
Do not approach the working area when the machine is in motion.
The machine is not licensed for road traffic.

4. WARRANTY

The validity of warranty expires if:

- ☞ the maintenance of the machine has not been carried out
- ☞ any modifications have been made to the machine without the producer's consent
- ☞ the machine has been overloaded and the above-mentioned instructions have not been followed.

5. INSTRUCTIONS FOR USE

5.1 CONNECTION OF THE MACHINE TO THE TRACTOR (SEE PICTURE B)

a) Connect the towing eye to the tractor by means of a steel bolt, with a min. diameter of 35 mm, equipped with a transverse safety pin.

b) Connect the flexible tubes equipped with ½" quick-attach to the hydraulic circuit of the tractor (see picture B).

c) Connect the electric kit, with which the machine is equipped, into the appropriate seats on the tractor, and mind the electric polarities: 58= (+) e 31 = (-) (see picture B)

d) Connect the PTO shaft to the tractor**. Power take-off 540 rpm.**

5.2 MACHINE LOADING

a) Put the bale on an hard and flat surface

b) Lower the loading chute, until it touches the surface of the ground by operating the lever (B). See picture 1.

c) Reverse with the machine until the bale is completely on the loading conveyor or load by means of other loading equipments.

d) Before closing the loading chute, cut the cords or nylon film.

e) Close the loading chute by operating the lever (B). See picture 2

! ATTENTION: THE BALE MUST NOT TOUCH THE ROTOR UNTIL IT IS PUT INTO OPERATION

! ATTENTION: BEFORE CLOSING THE LOADING CHUTE, MAKE SURE THAT NOBODY IS LOCATED NEXT TO IT.

5.3 DISTRIBUTION

a) Open the deflectors by means of the lever (A). (See picture 4)

b) Put the machine into operation by engaging the P.T.O. shaft to a rotation speed of 350/500 r.p.m. according to the distance to which the product has to be thrown.

c) Operate the conveyor by means of the lever (C). (See picture 3)

d) Adjust the conveyor speed by means of the valve located next to the distributor by operating the lever (D). (See picture 5)

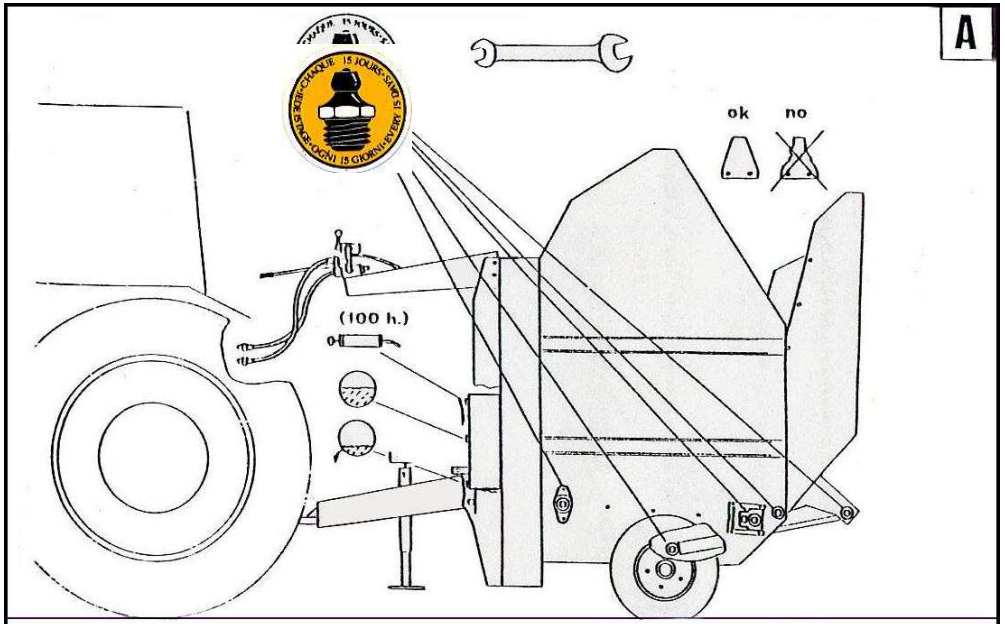

MANUTENZIONE. Da effettuare a macchina ferma.
WARTUNG. Nur bei abgestellter Maschine durchführen.
ENTRETIEN. A effectuer quand la machine n' est pas en fonction.
MAINTENANCE. To be carried out when the machine is out of operation
MANTIENIMENTO. A efectuar con maquina parada.

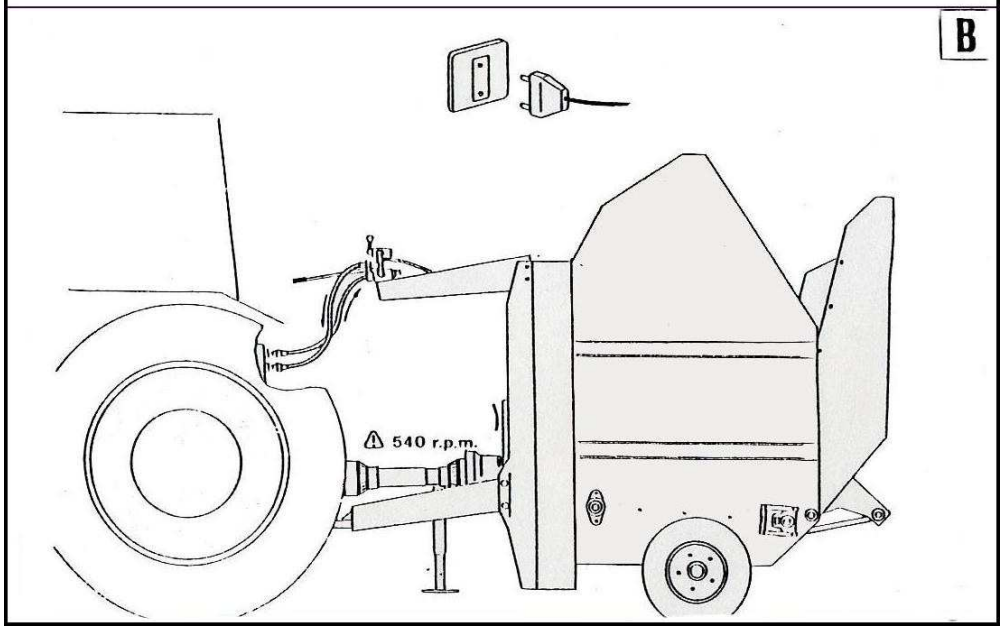

COLLEGAMENTO.
VERBINDUNG.
CONNEXION.
CONNECTION.
CONEXION.

LEVE DI COMANDO OPERATING LEVERS

SCHALTHEBEL LEVIERS DE COMMANDE

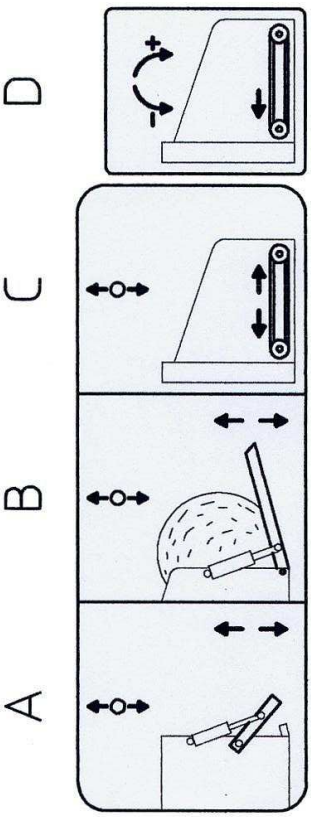

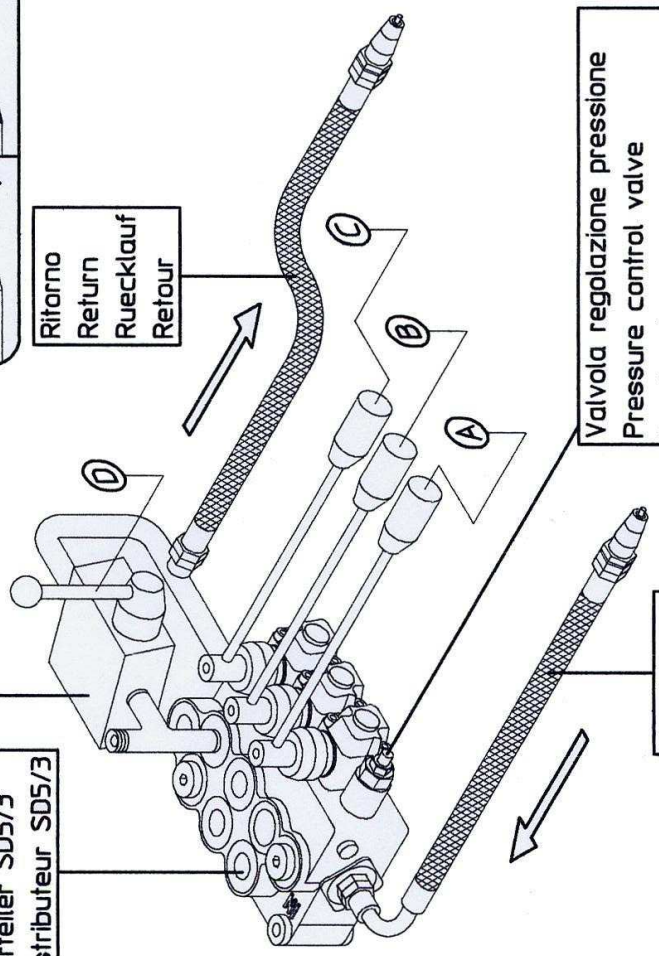

WWKR01

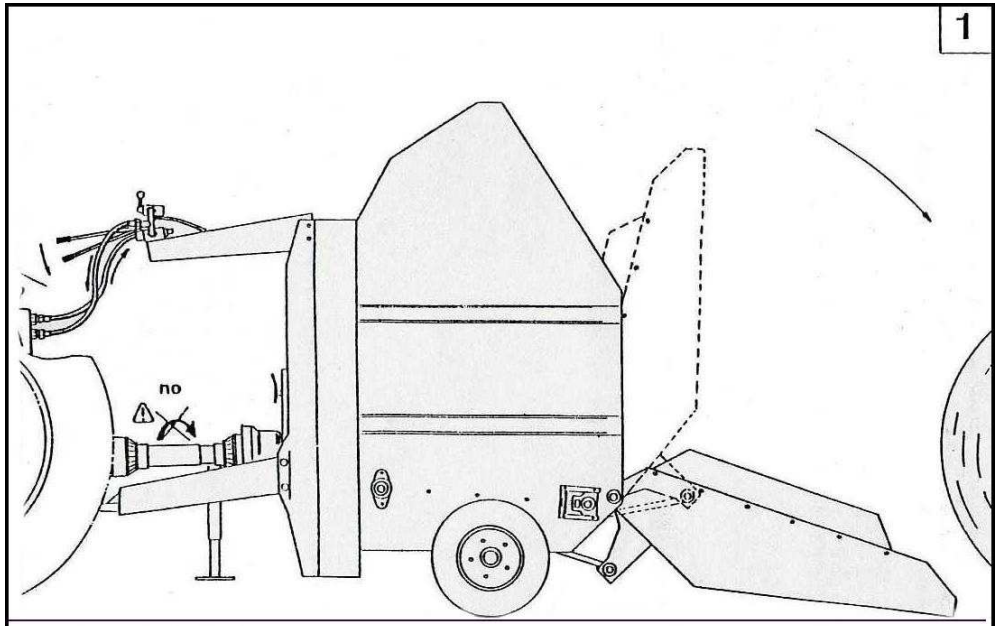

APERTURA DELLO SCIVOLO PER IL CARICO DEL BALLONE. Da effettuarsi con trasmissione cardanica non attiva.

OEFFNEN DER SELBSTLADEKLAPPE FUER DAS EINLADEN DES BALLENS. Mit ausgeschalteter Gelenkwelle durchführen.

OUVERTURE DE LA PORTE POUR LE CHARGEMENT DE LA BALLE. A effectuer lorsque la transmission n'est pas en mouvement.

OPENING OF TTHE CHUTE FOR BALE LOADING. To be carried out wit disengaged PTO.

APERTURA DE LA RAMPA PARA CARGAR LA BALA. A efectuar con la transmisión cardánica no activa.

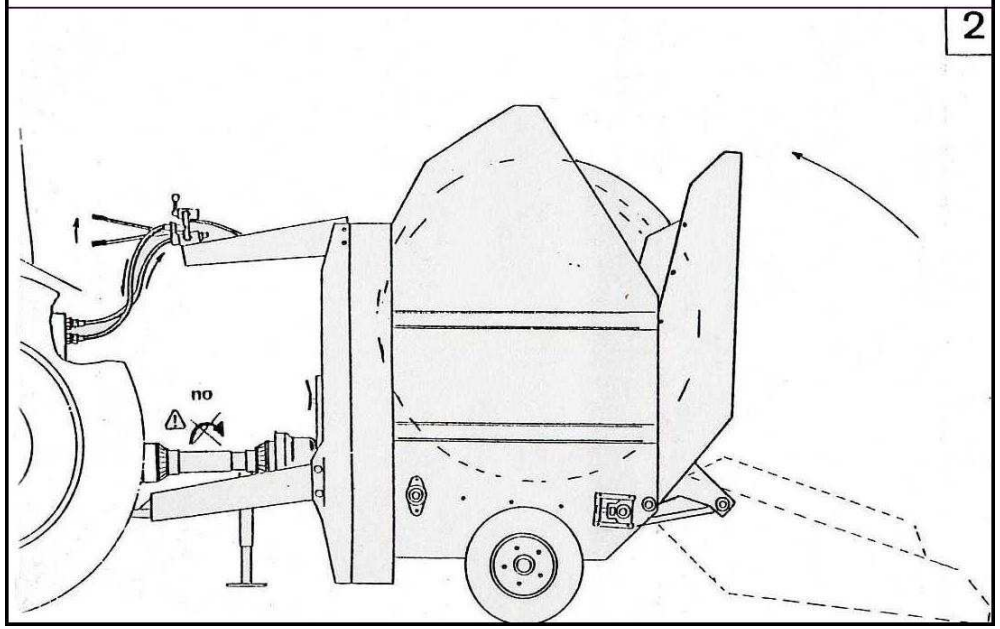

CHIUSURA DELLO SCIVOLO. La trasmissione cardanica è ancora inattiva.

SCHLIESSEN DER SELBSTLADEKLAPPE. Die Gelenkwelle bleibt noch ausgeschaltet.

FERMETURE DE LA PORTE. La transmission à cardans n'est pas en mouvement.

CLOSING OF THE CHUTE. The PTO is still disengaged.

CIERRE DE LA RAMPA. La transmisión cardánica tadaviá singue inactiva.

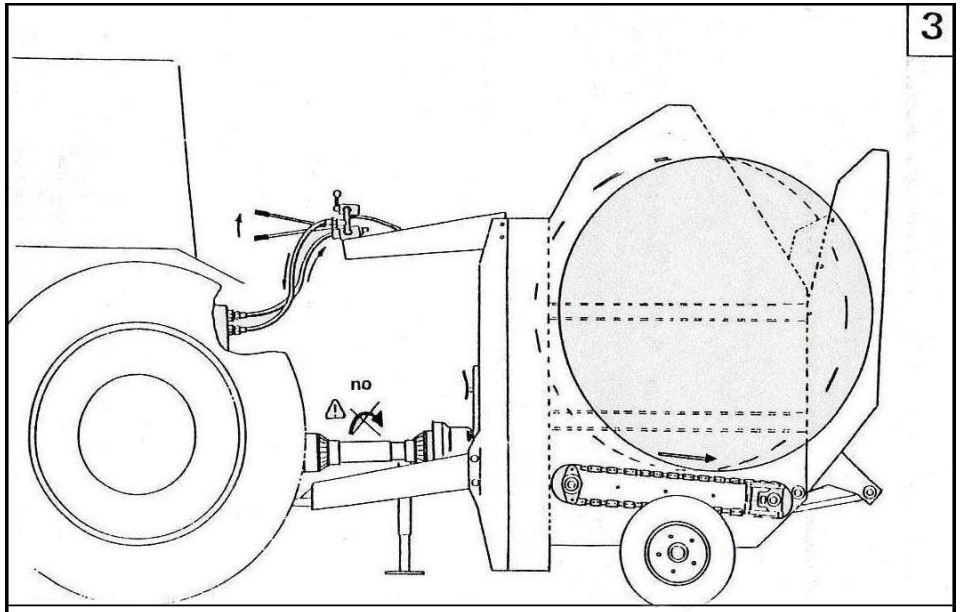

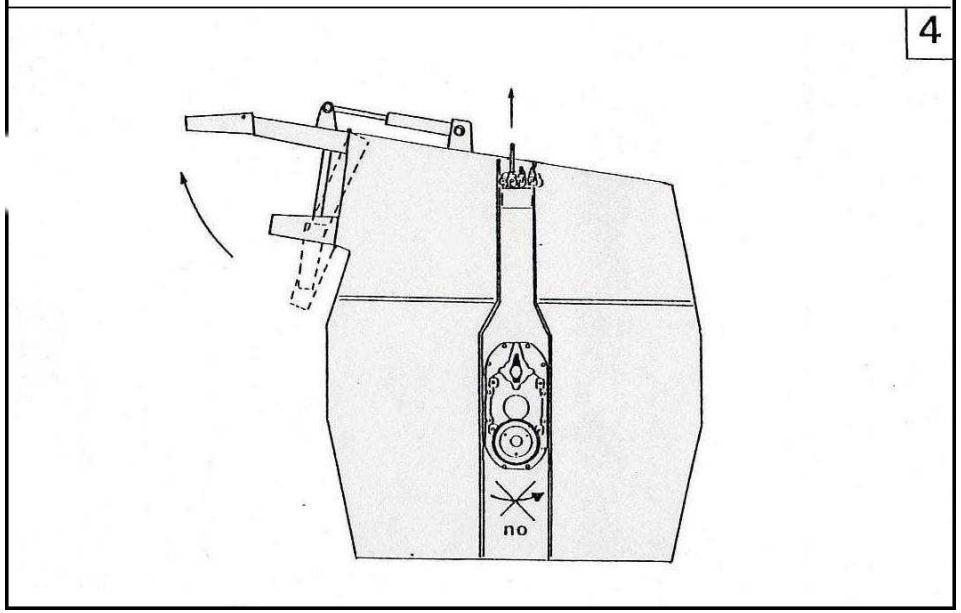

ASSESTAMENTO DEL MATERIALE MEDIANTE ROTAZIONE CONTRARIA DEL TAPPETO DI ALIMENTAZIONE. La trasmissione cardanica è ancora inattiva.

MATERIALSETZUNG DURCH DIE GEGENDREHUNG DES FÖRDERBANDES. Die Gelenkwelle bleibt noch Ausgeschaltet.

TASSEMENT DU MATERIEL PAR LA ROTATION CONTRAIRE DU TAPIS D'ALIMENTATION. La transmission à cardans n'est pas en mouvement

MATERIAL SETTING THROUGH COUNTER-ROTATION OF THE LOADING CONVEYOR. The PTO is still disengaged.

ASENTAMIENTO DEL MATERIAL MEDIANTE ROTACION CONTRARIA DE LA CINTA DE ALIMENTACION. La transmisión cardánica tadaviá singue inactiva.

APERTURA DEL DEFLETTORE DI SCARICO. La trasmissione cardanica è ancora inattiva.

ÖFFNEN DER ENTLADUNGSKLAPPE. Die Gelenkwelle bleibt noch ausgeschaltet.

OUVERTURE DE LA GOULOTTE DE DISTRIBUTION. La transmission à cardans n'est pas en mouvement.

OPENING OF THE OUTLET DEFLECTOR. The PTO is still disengaged.

APERTURA DE LA COMPUERTA DE DESCARGA. La transmisión cardánica tadaviá singue inactiva.

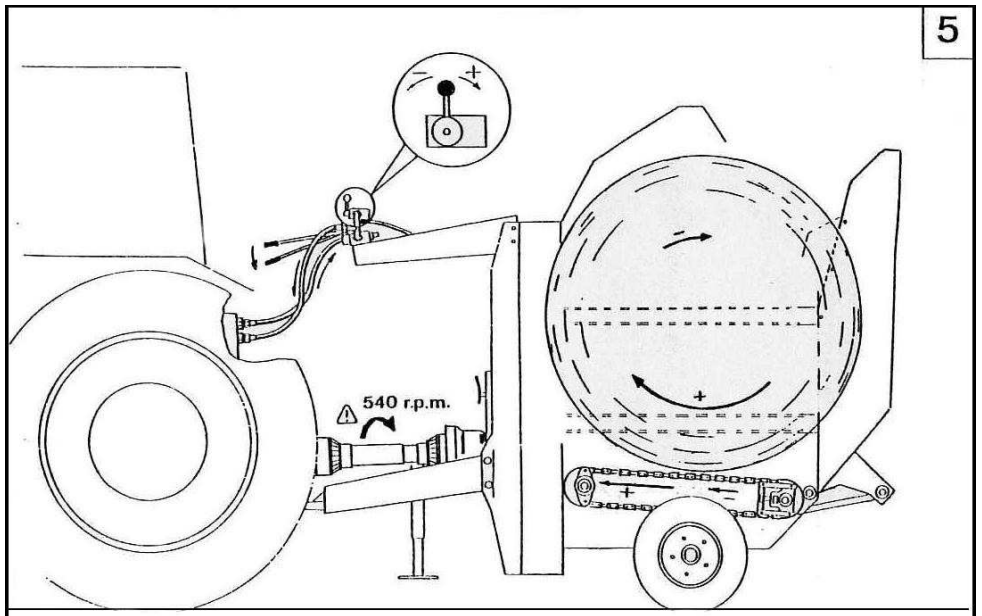

INNESTO DELLA TRASMISSIONE CARDANICA, AVVIO DEL TAPPETO DI ALIMENTAZIONE E CORRETTA REGOLAZIONE DELLA VELOCITA'DI AVANZAMENTO DEL TAPPETO (VALVOLA A).

KUPPLUNG DER GELENKWELLE, ANLASSEN DES FOERDERBANDS UND KORREKTE EINTRELLUNG DER VORSCHUBGESCHWINDIGKEIT DES FOERDERBANDES (VENTIL A).

EMBRAYAGE DE LA TRANSMISSION A CARDANS, DEMARRAGE DU TAPIS D'ALIMENTATION ET CORRECTION EVENTUELLE DU TEGLAGE DE LA VITESSE D'AVANCEMENT DU TAPIS (VALVE A).

CONNECTION OF THE PTO SHAFT, STARTING OF THE LOADING COVEYOR AND CORRECT SETTING OF ITS FEED SPEED (VALVE A).

CONEXION DE LA TRANSMISION CARDANICA, PUESTA EN MARCHA DE LA CINTA DEALIMEN-TACION Y CORRECTO AJUSTE DE LA VELOCIDAD DE AVANCE DE LA CINTA (VALVULA A).

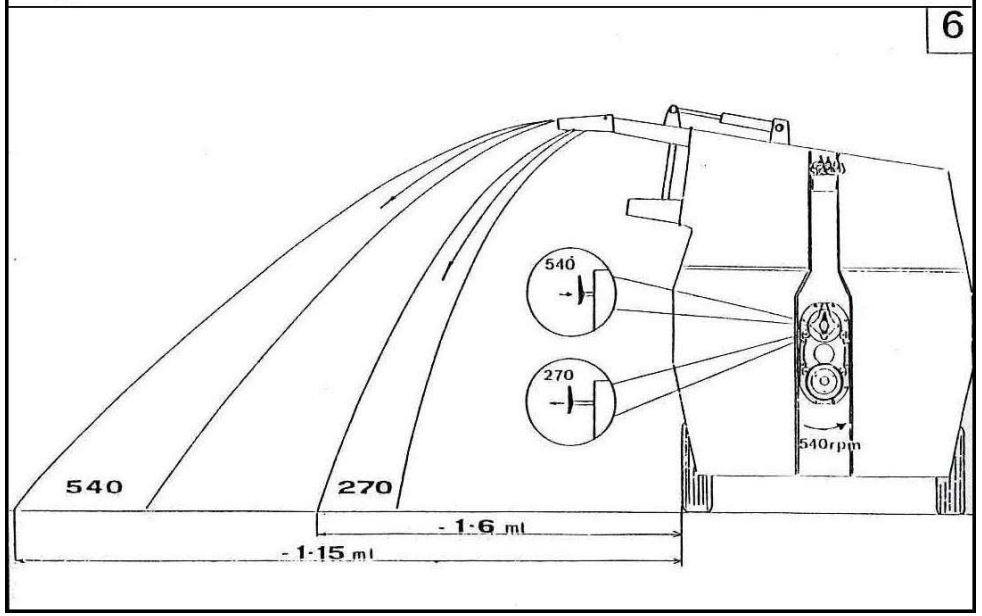

SELEZIONE DELLA VELOCITA' DI RATAZIONE DEL ROTORE IN FUNZIONE DELLE ESIGENZE DI LANCIO E TRINCIATURA DEL PRODOTTO.

AUSWAHL DER UMDREHUNGS-GESCHWINDIGKEIT DES ROTORS JE NACH WUNSCH DER EINSTREUWEITE UND ZERKLEINERUNG DES PRODUKTES.

SELECTION DE LA VITESSE DE ROTATION DU ROTOR SELON LES EXIGENCES DE PROJECTION ET DE HACHAGE DU PRODUIT.

SELECTION OF THE ROTATION SPEED OF THE ROTOR ACCORDING TO THE NEEDS OF PRODUCT LAUNCHING AND CHOPPING.

SELECCION DE LA VELOCIDAD DE ROTACION DEL ROTOR EN FUNCION DE LAS EXIGENCIAS DE LANZADO Y CORTADO DEL PRODUCTO.

GRIGLIA

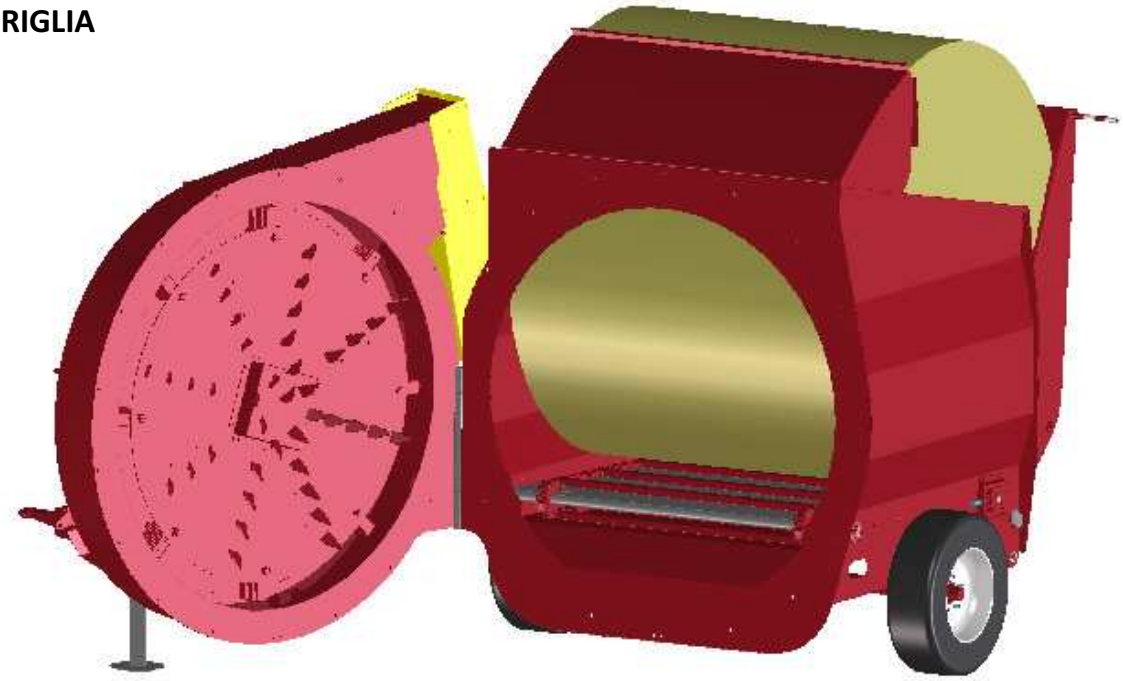

INGLESE

Before changing the grid, switch the machine off.

- Before starting with the operations, if possible, find a flat surface where you can park the machine.

- disconnect the PTO

- Unscrew all the external screws on the front of the machine

- Unscrew all the screws except for the 2 captive screws that are keeping the grid blocked to the front part of the machine. Check that the rear part of the machine will stay blocked and them push the left wheel in the opposite of the driving direction.

- the machine will start opening.

- Once the machine is open, unscrew the 2 captive screws in the upper and lower part of the grid and replace it.

Attention: when you are changing the grid , pay attention to the rotor's knives

MINISTRAW ROTORE E GRIGLIA - MINISTRAW ROTOR E SIEB

MINISTRAW ROTOR E GRID - MINISTRAW ROTOR E GRILLE

MIN01

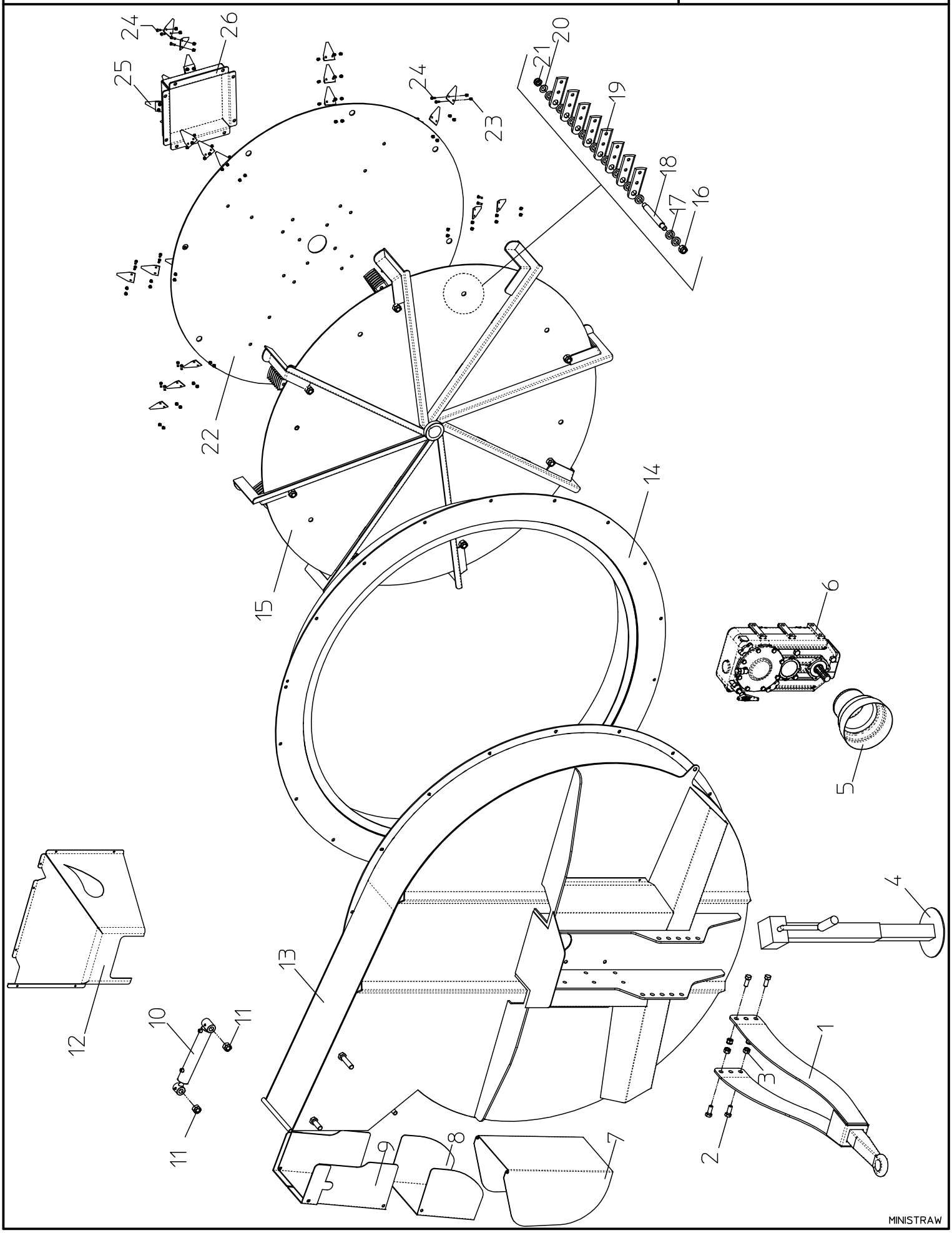

MINISTRAW ROTORE E GRIGLIA - MINISTRAW ROTOR E SIEB

MINISTRAW ROTOR E GRID - MINISTRAW ROTOR E GRILLE

1.	x	Timone	Anhangevorrichtung mit ose	Hitch bar	Timon
2.	128018050	Vite	Schraube	Screw	Vis
3.	121000018	Dado	Mutter	Nut	écrous
4.	x	Piedino manuale	Mechanische stuetsfuss	Mechanic foot	Bequille mecanique
5.	x	Cuffia	Abdeckung	Cover	Protection
6.	x	Cambio di velocità	Wechselgetriebe	Gearbox	Changement de vitesse
7.	x	Deflettore inferiore	Unteres leitblech	Lower flap	Deflecteur inferieure
8.	x	Deflettore mobile	Bewegliches leitblech	Movable flaps	Déflecteur mobil
9.	x	Deflettore superiore	Oberes leitlech	Upper flap	Déflecteur superieure
10.	x	Martinetto	Hydraulikzylinder	Hydraulic jack	Vérin hydraulique
11.	x	Dado	Mutter	Nut	écrous
12.	x	Carter	Getriebekasten	Crankcase	Carter
13.	x	Cassone anteriore	Deckel forn	Front cover	Couvertore avant
14.	x	Griglia d.12	Sieb d.12	Grid d.12	Grille d.12
	x	Griglia d.25	Sieb d.25	Grid d.25	Grille d.25
	x	Griglia d.35	Sieb d.35	Grid d.35	Grille d.35
	x	Griglia d.50x55	Sieb 50x55	Grid d.50x55	Grille d.50x55
15.	x	Rotore completo	Rotor komplett	Turbine complete	Rotor complet
16.	x	Dado	Mutter	Nut	écrous
17.	x	Bussola	Buchse	Bushing	Douille
18.	x	Albero	Welle	Shaft	Arbre
19.	x	Coltello	Messer	Knife	Couteau
20.	x	Rondella	Beilagscheibe	Washer	Rondelle
21.	x	Dado	Mutter	Nut	écrous
22.	x	Lamiera rotore	Rotorplatte	Rotor plate	Plaque de rotor
23.	x	Dado	Mutter	Nut	écrous
24.	x	Vite	Schraube	Screw	Vis
25.	x	Sezione diritta	Gerade klinge	Straight blade	Couteau droit
26.	x	Stampato centrale rotore	Zentrierplatte des rotors	Turbine central swage	Piéce estampé du rotor

MINISTRAW CASSONE - MINISTRAW MISCHWANNE

MINISTRAW MIXING TANK - MINISTRAW CUVE

MIN02

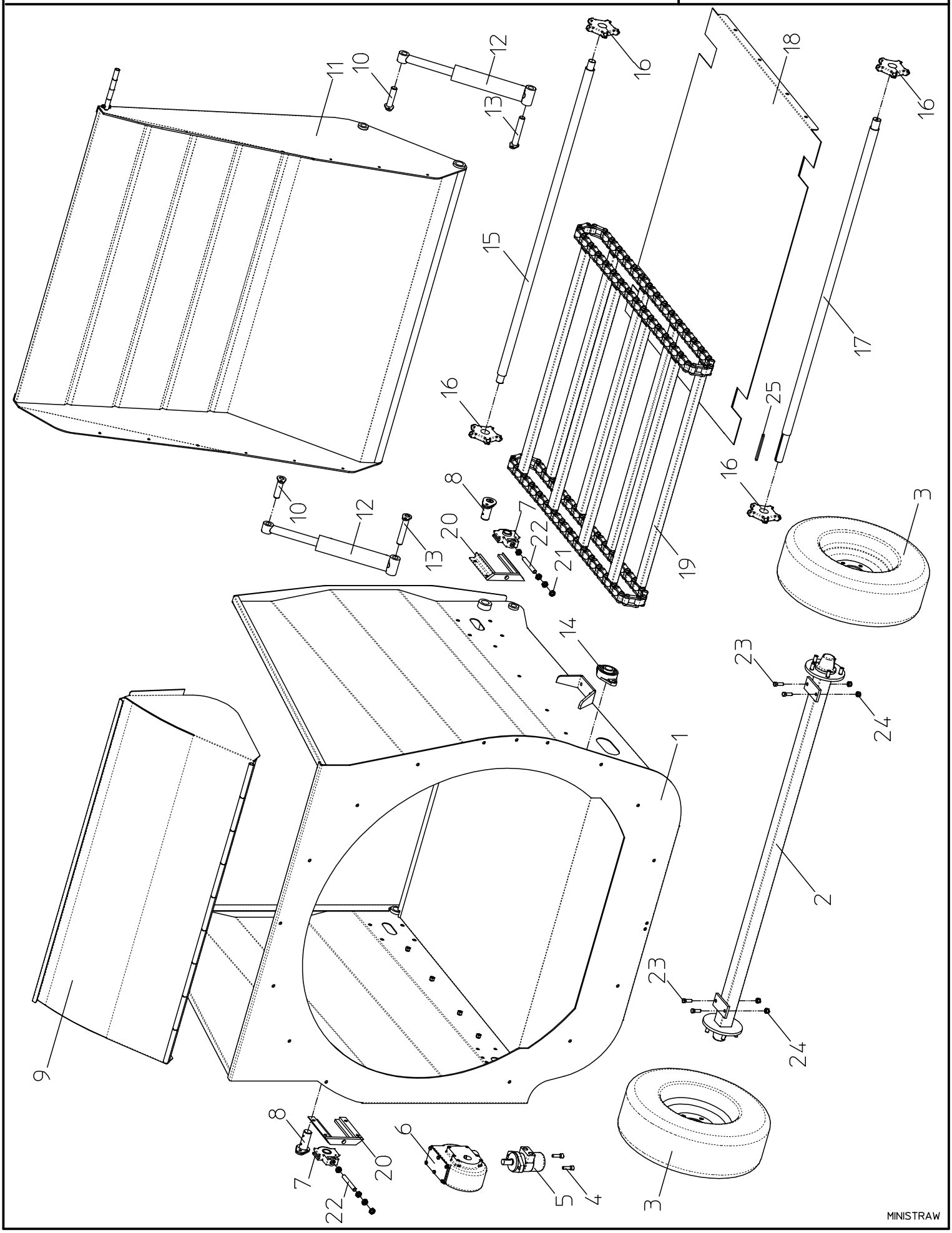

MINISTRAW CASSONE - MINISTRAW MISCHWANNE

MINISTRAW MIXING TANK - MINISTRAW CUVE

1.	X	Cassone	Wanne	Machine box	Caisse
2.	X	Assale	Achse	Axle	Arbre
3.	X	Ruota	Reifen	Wheel	Roues
4.	X	Vite	Schraube	Screw	Vis
5.	X	Motore	Hydraulikmotor	Hydraulic motor	Moteur hydraulique
6.	X	Riduttore	Drehzahlreduktor	Reduction gear	Reductéur
7.	X	Supporto UCT206	Traeger UCT 206	Support UCT 206	Support UCT 206
8.	X	Perno Ø35x90	Bolzen Ø35x90	Pivot Ø35x90	Pivot Ø35x90
9.	X	Carter	Gehaeuse	Casing	Carter
10.	X	Perno Ø25x95	Bolzen Ø25x95	Pivot Ø25x95	Pivot Ø25x95
11.	X	Scivolo	Beladeklappe	Rear door	Porte de dechargement
12.	X	Martinetto	Hubzylinder	Hydraulic jack	Verin hydraulique
13.	X	Perno Ø25x140	Bolzen Ø25x140	Pivot Ø25x140	Pivot Ø25x140
14.	X	Supporto UCFL 207	Lager UCFL 207	Bearing UCFL 207	Support UCFL 207
15.	X	Albero mosso tappetino	Umlenkwelle	Conveyor idler shaft	Arbre fou du tapis
16.	X	Ingranaggio	Kettenzahnrad	Sprocket for noiseless chain	Pignon pour chain
17.	X	Albero motore tappetino	Bandantriebswelle	Conveyor driving shaft	Arbre moteur du tapis
18.	X	Fondo	Bodenblech	Bottom plate	Fond de la caisse
19.	X	Catena	Kette	Chain	Chaine
20.	X	Tendicatena	Kettenspanner	Chain strechter	Tendeur de chaine
21.	X	Dado	Mutter	Nut	écrous
22.	X	Barra filettata	Gewindestange	Threaded rod	Tige filetée
23.	X	Vite	Schraube	Screw	Vis
24.	X	Dado	Mutter	Nut	écrous
25.	x	Chiavetta	Keil	Key	Clavette

MINISTRAW IMPIANTO IDRAULICO	TAVOLA K03

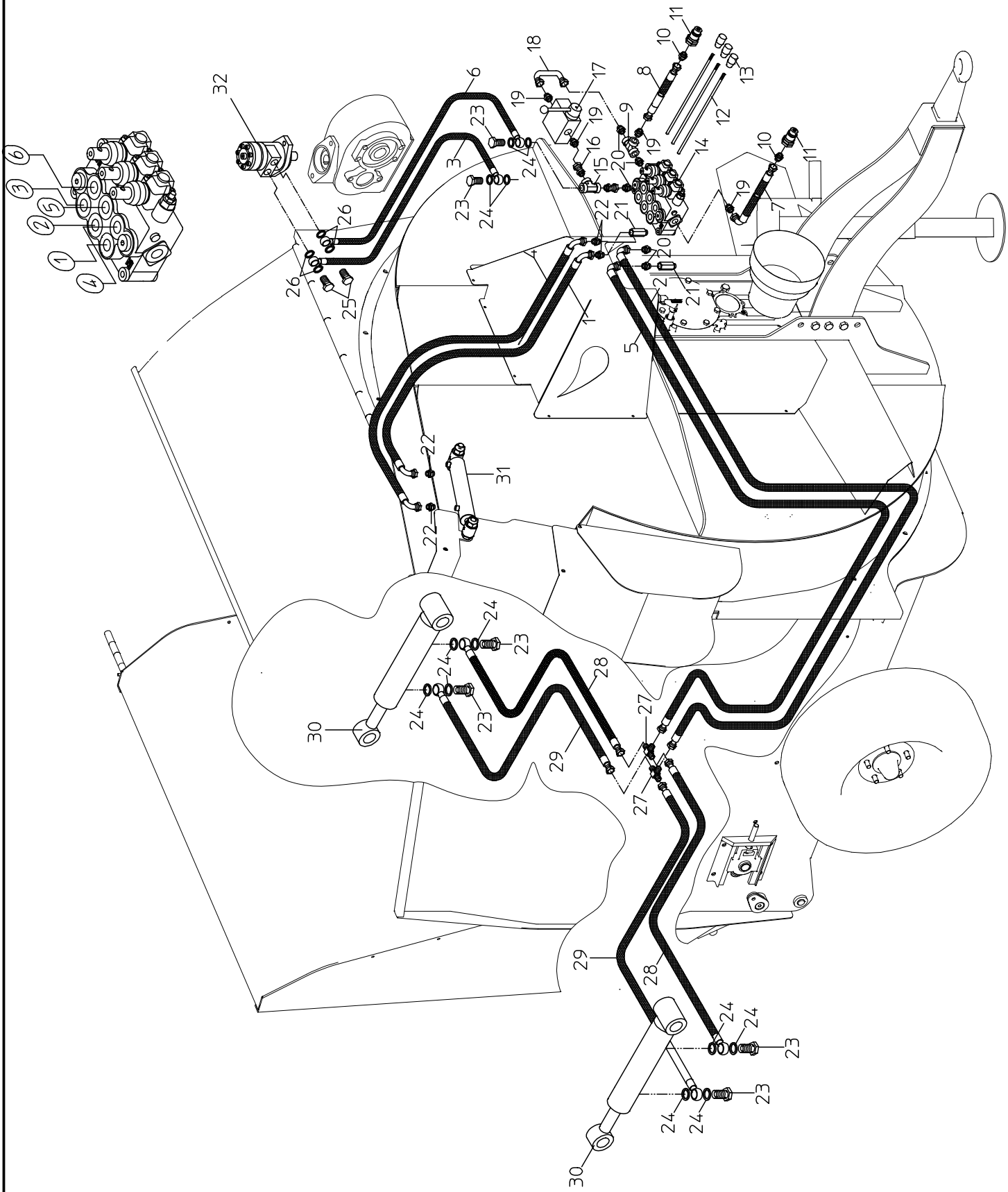

MINISTRAW IMPIANTO IDRAULICO

MINI03

01.	2823120007	tubo	Schlauch	pipe	tube
02.	2823365007	tubo	Schlauch	pipe	tube
03.	28242600630	tubo	Schlauch	pipe	tube
04.	2823135007	tubo	Schlauch	pipe	tube
05.	2823365007	tubo	Schlauch	pipe	tube
06.	28242600630	tubo	Schlauch	pipe	tube
07.	2825240107	tubo	Schlauch	pipe	tube
08.	2825240107	tubo	Schlauch	pipe	tube
09.	280007050	T femmina	T-Stueck	T shaped female manifoid	T femelle
10.	280001020	nipplo	Nippel	nipple	nipple
11.	260011000	innesto maschio	Kupplung	male coupling	joint male
12.	240010100	leva	Funktionshebel	levers	levier de controle
13.	122000008	volantino	Handrad	handwell	volant a main
14.	240010030	distributore SD5/3	Verteiler mit 3 Funktionsheibein	distributor with 3 control	distributeur avec 3 leviers
15.	280007050	T femmina	T-Stueck weiblich	T shaped female manifoid	T femelle
16.	280009075	adattatore	Adaptor	adapter	adapteur
17.	260010113	valvola regolazione velocita'	Geschwindigkeitsregl. ventil	speed control valve	soupape regulation de la vitesse
18.	281000050	tubo in ferro	Rohr	iron tube	tube en fer
19.	280002020	nipplo	Nippel	nipple	nipple
20.	280001010	nipplo	Nippel	nipple	nipple
21.	280009075	adattatore	Adaptor	adapter	adapteur
22.	280002010	nipplo	Nippel	nipple	nipple
23.	280003430	vite forata	Hohlschraube	hollow screw	vis fore
24.	280004030	rondella	Beilagscheibe	washer	rondelle
25.	280003030	vite forata	Hohlschraube	hollow screw	vis fore
26.	280004020	rondella	Beilagscheibe	washer	rondelle
27.	280007160	T maschio	T-Stueck maennlich	T male	T mâle
28.	2823110014	tubo	Schlauch	pipe	tube
29.	2823125014	tubo	Schlauch	pipe	tube
30.	150030218	martinetto	Hubzylinder	hydraulic jack	verin hydraulique
31.	150030200	martinetto	Hubzylinder	hydraulic jack	verin hydraulique
32.	230010021	motore	Hydromotor	hydraulic motor	moteur hydraulique

CRONO S.r.l.
Via Corvione 20, Isorella (BS) Italia. Tel. 030/9952323 – 24, Fax 030/9952325
Email info@luclar.it Sito Web www.luclar.it